Mastertubi S.p.a. - Via Goito 23/9, 10042 Nichelino (To) - Tel. 011.6290003 - Fax 011.6290011 - www.mastertubi.it

GIUNTO ROTANTE ASSIALE

AVVOLGITUBO › GIUNTI ROTANTI

Image:

Mastertubi.it/q?1409

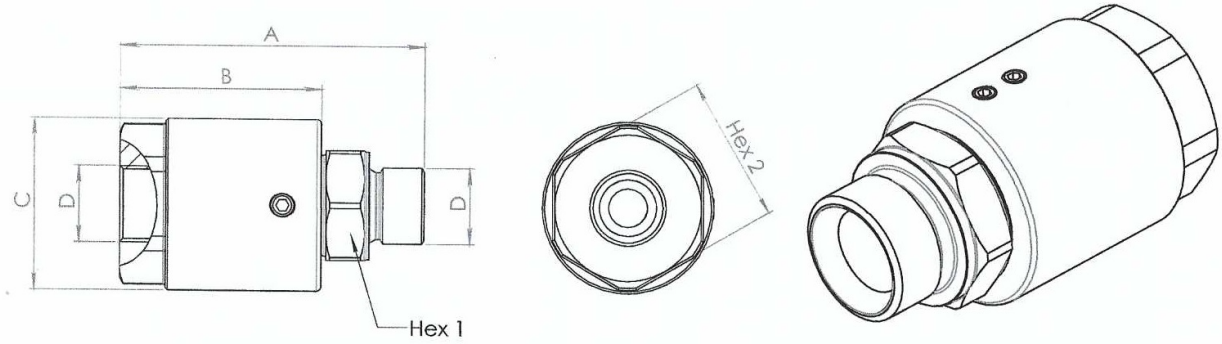

Size	A	B	C	D BSP	Hex 1	Hex 2	Weight kg
01	63	42	34	1/4	19	30	0,28
02	66,5	44	37,5	3/8	22	32	0,35
03	70,4	44	39,5	1/2	27	32	0,39
04	90,7	60	49,5	3/4	32	41	0,80
05	100	65	54,5	1	41	46	0,95

Hydraulic Symbol

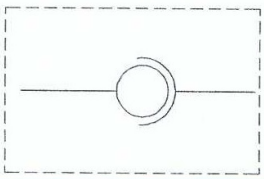

Curves

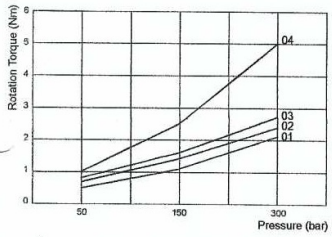

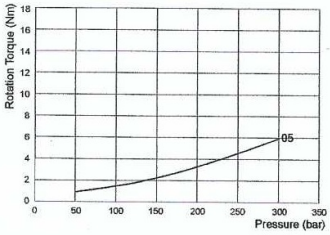

Notice

To be used only to compensate for occasional rotations, not suitable for continuous rotations.

Features

Size	01	02	03	04	05
Max Flow Rate (lpm)	25	45	80	120	150
Max Static Pressure (bar)	400	400	360	310	280

Materials: Zinc plated steel.